Equipped with AEM® Dryflow™ Filter
No Oil Required!

INSTALLATION INSTRUCTIONS

PART NUMBER

21-740C (Gun Metal Grey Finish)

2015-16	Ford	Mustang	2.3L Turbo	C.A.R.B. E.O. # D-670-23
2017	Ford	Mustang	2.3L Turbo	

Intake systems for vehicles listed are 50 state legal. See AEMIntakes.com for CARB status on each part for a specific vehicle.

ITEM NO.	PART NUMBER	DESCRIPTION	QTY.
1	2-1520C	TUBE; 3.5"OD X 30", 21-740; GUNMETAL GRAY	1
2	AEM-21-2148D-HK	AIR FILTER; 3-1/2"FLG, 8-1/2"L X 7"W, TOP-6-1/4L X 4W, 5-1/2H W/HOLE	1
3	20-8542	HEAT SHIELD; 2015 FORD MUSTANG TB/PC	1
4	102489	EDGE TRIM; 3/4"BULB, TOP LOC., 30"L	1
5	AEM-8-4016	EDGE TRIM; 3/4"BULB, TOP LOC., 16"L	2
6	082628	QUICK DISCONNECT W/1/4 NPT	1
7	21685	WASHER; 1" X .300 X .100 RUBBER	4
8	1228599	MOUNT, RUBBER 1" X 6mm	1
9	559960	WASHER, 8mm	1
10	077002	BOLT; M8-1.25 X 16mm, HEX, SS	1
11	08160	WASHER; 1"D X 1/4 HOLE FENDER	3
12	444.460.04	NUT; M6 HEX SERRATED	2
13	08620K	1/2" BNDHOSE CLAMP,3.15"-4.00"	1

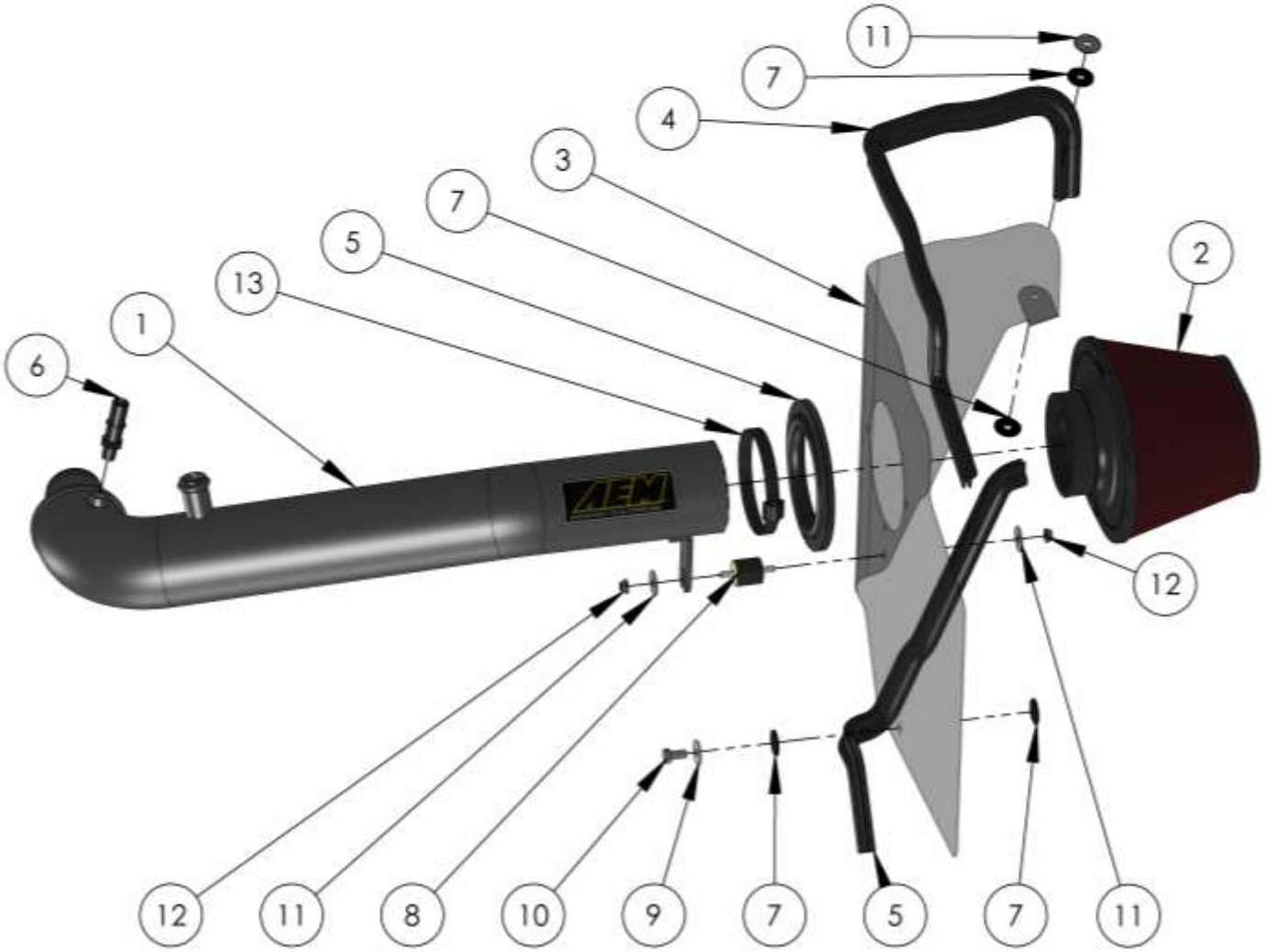

Read and understand these instructions <u>BEFORE</u> attempting to install this product. Failure to follow installation instructions and not using the provided hardware may damage the intake tube, throttle body and engine.

Tools Needed:	
Screw Driver	Pliers
10mm Socket	
8mm Socket	
7mm Socket	
Socket Driver	

1. Preparing Vehicle

a. Make sure vehicle is parked on level surface.
b. Set the parking brake.
c. If engine has run in the past two hours, let it cool down.
d. Disconnect negative battery terminal.
e. Do not discard stock components after removal of the factory system.
f. Open the air intake kit package and make sure all parts are included.

2. Removal of stock system

a. Use 10mm socket to remove the bolt securing the factory air box.

b. Remove wiring harness from the inlet air temperature (IAT) sensor and use pliers to remove the harness from the airbox where shown by the arrow above.

c. Use pliers to release the clamp securing the recirculation hose to the factory intake tube and disconnect the hose from intake tube.

d. Release and disconnect the PCV hose from the intake tube.

e. Use a 7mm socket to loosen the hose clamp securing the coupler to the turbo compressor inlet and remove the coupler from the turbo.

f. Remove the factory intake assembly by lifting out as shown.

3. Installation of AEM® intake system.

a. When installing the intake system, do not completely tighten the hose clamps or mounting hardware until instructed to do so.

a. Use a 7mm socket to remove the coupler from the factory intake tube.

b. Position the coupler on the tube approximately as shown. Install quick disconnect fitting on tube. Torque the clamp to 30in-lbs or until snugly secured to tube.

c. Assemble the heat shield as shown according to the component list on page 2.

d. Install heat shield assembly and fully tighten lower bolt after starting upper bolt.

e. Lower intake tube into vehicle starting with the turbo mount end and install onto the turbo.

f. Reinstall the PCV hose by pushing it down over the quick disconnect fitting until it clicks.

g. Reinstall the recirculation hose over it's corresponding tube port and engage the spring clamp.

h. Remove the IAT sensor from the factory airbox by pushing and twisting counter-clockwise.

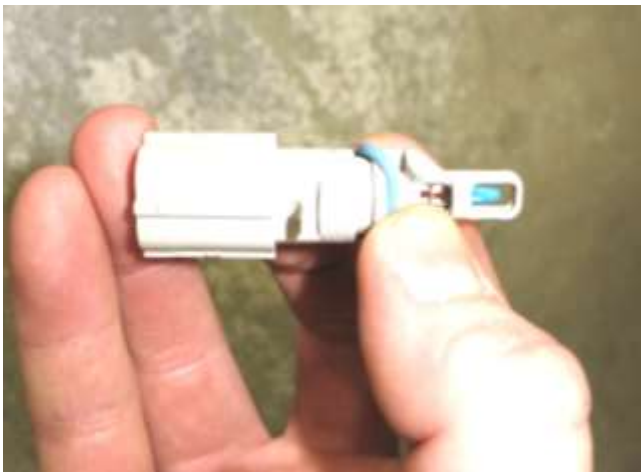

i. Carefully remove the o-ring from the IAT sensor and keep with the factory airbox.

j. Install the IAT sensor into the hole in the end of the filter to the depth of the limiting tab.

k. Install the included clamp on filter and maneuver the filter into position on the tube as shown.

m. Connect the IAT wiring harness.

l. Slide the clamp through the heat shield and torque to 30in-lbs ensuring that the clamp is completely engaged beyond the lip at the end of the filter.

n. Add the nut and washer to the rubber mount under the tube on the heat shield. Position the tube and filter for optimal alignment and tighten this nut and the upper heat shield bolt.

Factory air induction system.

Finished installation of AEM Intake System.

4. Reassemble Vehicle

a. Position the intake tube for the best fitment. Be sure that the tube or any other components do not contact any part of the vehicle in appropriately.
b. Check for proper hood clearance. Re-adjust tube if necessary and re-tighten them.
c. Inspect the engine bay for any loose tools and check that all fasteners that were moved or removed are properly tightened.
d. Reconnect negative battery terminal and start engine. Let the vehicle idle for 3 minutes. Perform a final inspection before driving the vehicle.

5. Service and Maintenance

a. AEM Induction Systems requires cleaning the intake system's air filter element every 100,000 miles. When used in dusty or off-road environments, our filters will require cleaning more often. We recommend that you visually inspect your filter once every 25,000 miles to determine if the screen is still visible. When the screen is no longer visible some place on the filter element, it is time to clean it. To clean, purchase our Synthetic air filter cleaner, part number 1-1000 and follow the easy instructions.
b. Use window cleaner to clean your powder coated AEM® intake tube.
NOTE: DO NOT USE aluminum polish on powder coated AEM® intake tubes.

For technical inquiries
e-mail us at
sales@aemintakes.com
or
call us at
800.992.3000

AEM Air Intake System Warranty Policy

AEM® warrants that its intake systems will last for the life of your vehicle. AEM® will not honor this warranty due to mechanical damage (i.e. improper installation or fitment), damage from misuse, accidents or flying debris. AEM® will not warrant its powder coating if the finish has been cleaned with a hydrocarbon-based solvent. The powder coating should only be cleaned with a mild soap and water solution. Proof of purchase of both the vehicle and AEM® intake system is required for redemption of a warranty claim.

This warranty is limited to the repair or replacement of the AEM® part. In no event shall this warranty exceed the original purchase price of the AEM® part nor shall AEM® be responsible for special, incidental or consequential damages or cost incurred due to the failure of this product. Warranty claims to AEM® must be transportation prepaid and accompanied with dated proof of purchase. This warranty applies only to the original purchaser of product and is nontransferable. Improper use or installation, use for racing, accident, abuse, unauthorized repairs or alterations voids this warranty. AEM® disclaims any liability for consequential damages due to breach of any written or implied warranty on all products manufactured by AEM®. Warranty returns will only be accepted by AEM® when accompanied by a valid Return Merchandise Authorization (RMA) number. Credit for defective products will be issued pending inspection. Product must be received by AEM® within 30 days of the date RMA is issued.

If you have a warranty issue, please call (800) 992-3000 and our customer service department will assist you. A proof of purchase is required for all AEM® warranty claims.

Intake systems for vehicles listed are 50 state legal. See AEMIntakes.com for CARB status on each part for a specific vehicle.